NW CROPS & SOILS PROGRAM

UNIVERSITY OF VERMONT EXTENSION

CULTIVATING HEALTHY COMMUNITIES

Modular Hop Oast

Introduction

Hops are commonly harvested at 75-80% moisture by weight, but are ideally pelleted, packaged and stored only after they are dried to 8-10% moisture. To put this into perspective consider that a pound of "dry" hops starts out with about 3 pounds of water (a little less than a half gallon) that has to be evaporated by drying.

In large, commercial hop production whole buildings are dedicated to the careful process of drying hops to the desired storage moisture. Given the nascent, distributed, and small-scale nature of Vermont's resurging hop industry a different approach is needed. To this end, a modular hops oast has been developed and demonstrated by UVM Extension and Borderview Farm. This oast is designed as an integrated cabinet drier that holds trays of hops. The drying is accomplished with a fan, heater and controller.

The oast includes two 4'x4'x8' cabinets with independent access doors and controls. Total capacity is 600 lbs wet hops which can be dried in 8 hours.

Different hop varieties can be kept separate in the oast by placing them in different trays. A total of 8 trays can be accommodated in each cabinet. Wire mesh is used as the bottom for the trays which allows air flow through the hops.

Design

The aim of the design is to use readily available materials and common construction skills and to result in a modular and scalable oast that supports hop growers of various scales. A base module of 4' W x 4' D x 8' H makes use of standard building materials well and allows for conveniently sized hop trays. All of the main structure is made with standard construction lumber and plywood. The electrical system is 220 VAC single phase and uses fairly common parts and wiring. The fan motor is 1/4 hP and the fan impel-

NW CROPS & SOILS PROGRAM

UNIVERSITY OF VERMONT EXTENSION

CULTIVATING HEALTHY COMMUNITIES

Modular Hop Oast

ler is a 24 inch vane axial design capable of 3250 CFM at 0.7 iwc pressure rise (at 1750 RPM). The majority of air flow is circulation within the cabinet, however in order to dry the hops the humidified air must be removed. Holes are drilled in the top of the cabinet at high pressure and low pressure areas along the impeller resulting in exhaust and fresh air intake respectively. The placement of these holes and the degree to which they are open or covered determines how much "stripping" air is pulled through the cabinet. The heating element is a 3500 Watt bent tubular heater. Although one can dry hops using unheated, ambient air, the addition of well controlled heat to the air allows for quicker drying reducing labor and maintaining higher quality hops. The components used in this oast have been selected to dry 300 lbs of wet hops from 80% moisture to 10% moisture in 8 hours with little to no labor required.

The fan and heater are installed on the ceiling of the cabinet. A PID controller (inset) rests on top of the cabinet and ensures temperature control.

A proportional-integral-derivative (PID) controller has been used in this system. This type of controller allows the user to set a target temperature and by monitoring the actual temperature in the cabinet using a thermocouple it "zeroes" in on the set-point. This differs from a thermostatic control which would provide an "average" temperature of the set-point but with sometimes wide fluctuations above or below it. The PID controller is always monitoring the difference between the set-point and the actual temperature, the historical difference, and the rate at which this difference is changing in order to predictably adjust the heater operation to attain the desired temperature.

Cost (per 4'x4'x8' cabinet)

Lumber/Screws/Hardware	$246
Angle Iron for Tray Rack	$104
1/3 H.P. Fan Motor	$110
Fan Blades (from Multi-Wing)	$78
Heating Elements 3500 Watt (from Chromalox)	$332
Controls	$100
Total Materials	$970
Labor	30 Hours

Plans for the UVM Modular Hop Oast including design drawings, a bill of materials, and a description of the machine are available for download from http://farmhack.org/tools/modular-hop-oast-or-tray-drier-herbs.

A project of University of Vermont Extension; Vermont Agency of Agriculture, Food and Markets; and Massachusetts Department of Agricultural Resources through the USDA Specialty Crops Block Grants Program.

VERMONT AGENCY OF AGRICULTURE, FOODS & MARKETS

MDAR MASSACHUSETTS DEPARTMENT OF AGRICULTURAL RESOURCES

USDA

Contact:
UVM Extension NW Crops and Soils Team
Email: hoppenin@uvm.edu
Phone: 802 524 6501

NOTES:

1. Power source is assumed to be 240 VAC two phase connected to a 20 AMP breaker (min).
2. The assembly is a single unit intended for a single 4'x4'x8' cabinet. Capacity can be expanded by building multiple cabinets and duplicating this circuit.
3. At the time of design no ready source for a DPST temperature switch was known so two SPST switches are shown.
4. A Type K Thermocouple is shown in the attached, but most PID Controllers allow a variety of temperature inputs to be used. Alternate wiring may be required, consult the PIC Controller manual. Consider a temperature sensor with higher mass as rapid response is not necessary and a higher mass sensor will limit noise in the signal to the controller. Sensor should be fixed to the cabinet to prevent vibration.
5. A door switch (magnetic or proximity) could be included to shut off the fan motor when the door is opened. It would be wired in series with the power supply to the fan motor.
6. Initial PID control settings found to work in 2012 were: P=2, i=55, d=41.
7. Most PID controllers also include alarm outputs which could alert the user to extreme conditions (either too cold or too hot) if wired to a warning light or speaker.

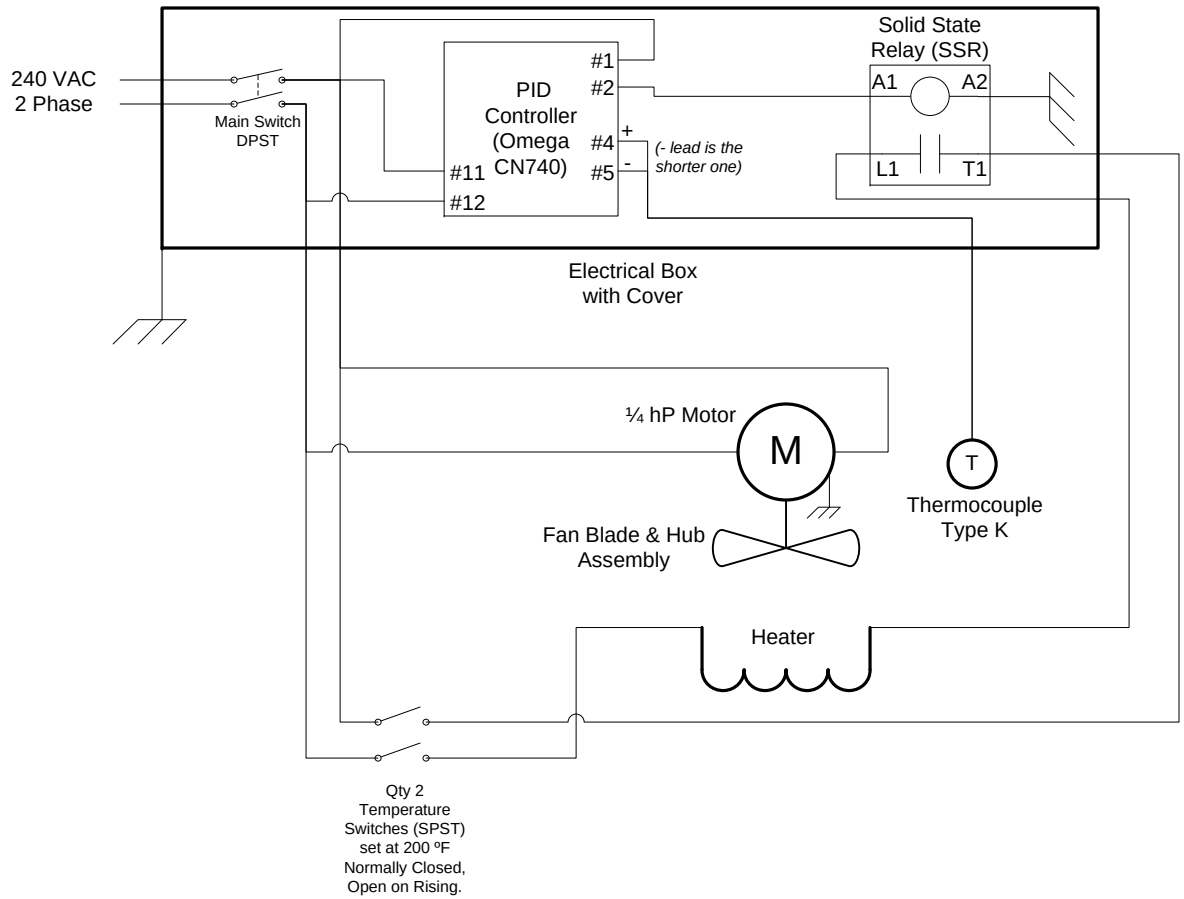

The University of Vermont Extension Hops Project
Northwest Crops and Soils Team

ELECTRICAL SCHEMATIC
Hops Oast (Drier)

SIZE	FSCM NO	DWG NO	REV
A		UVM-2012-0001	1

C. Callahan

SCALE	1 : 1	2014 07 16	SHEET	1 OF 3

QTY	UNIT	DESCRIPTION / LINK
1	each	Oast Cabinet with hinged door *See UVM Extension "Modular Hop Oast"*
1	each	Main 220 VAC switch, 20 Amp rating DPDT Stays Switched - like McMaster Carr #8001K85 http://www.mcmaster.com/#standard-toggle-pilot-switches/=g4qocr
1	each	¼ hP Fan motor (110 VAC)
1	each	Fan Blade & Hub Assembly Multi-Wing P/N 22/8-8/25/PAG/3HL/JA 0.625 3T3C/AR Built to spec: http://www.multi-wing.net
1	each	Heater Chromalox P/N 393-306035-497 – 3000 Watt @ 240 VAC or similar Built to spec: http://www.chromalox.com
1	each	PID Controller ColdfusionX - TET612 PID Controller, OMEGA CN740 or similar Manual: http://chemphys.purduecal.edu/~ncrelich//PortableDocuments/3b-NEVA/TET612_Manual.pdf Available: http://www.amazon.com/dp/B002PIM3R8/?tag=seattlefoodgeek-20
2	each	Solid State Relay – 220 VAC 25 Amp Fotek P/N SSR-25 DA or similar Specs: http://www.fotek.com.hk/page1e.htm Available: http://www.amazon.com/dp/B004HZN628/?tag=seattlefoodgeek-20
1	each	Door Switch (DPST)
2	each	Sensasys Thermal Switch – P/N 2511L002-140 L-155 – Open 140 °F / Close 120 °F. Rated for 25 A at 220 VAC or similar Available: http://www.senasys.com/shop/products-page/2511-34-heavy-duty/2511l002/
1	each	Temperature Sensor PT100 Platinum Thermistor / RTD or Type K Available: http://www.ebay.com/sch/i.html?_nkw=pt100+probe&_sticky=1&_sop=15&_sc=1
As req'd		Wire

NOTE: Quanties listed are for a single cabinet. Capacity can be expanded by building multiple cabinets.

The UNIVERSITY of VERMONT EXTENSION

The University of Vermont Extension Hops Project
Northwest Crops and Soils Team

BILL OF MATERIALS – Electrical System
Hops Oast (Drier)

SIZE	FSCM NO	DWG NO	REV
A		UVM-2012-0001	1

C. Callahan

SCALE	1 : 1	2014 07 16	SHEET	2 OF 3

The UNIVERSITY of VERMONT EXTENSION	The University of Vermont Extension Hops Project Northwest Crops and Soils Team			
	CABINET Hops Oast (Drier)			
	SIZE A	FSCM NO	DWG NO UVM-2012-0001	REV 1
C. Callahan	SCALE 1/16 : 1	2014 07 16	SHEET 1 OF 3	

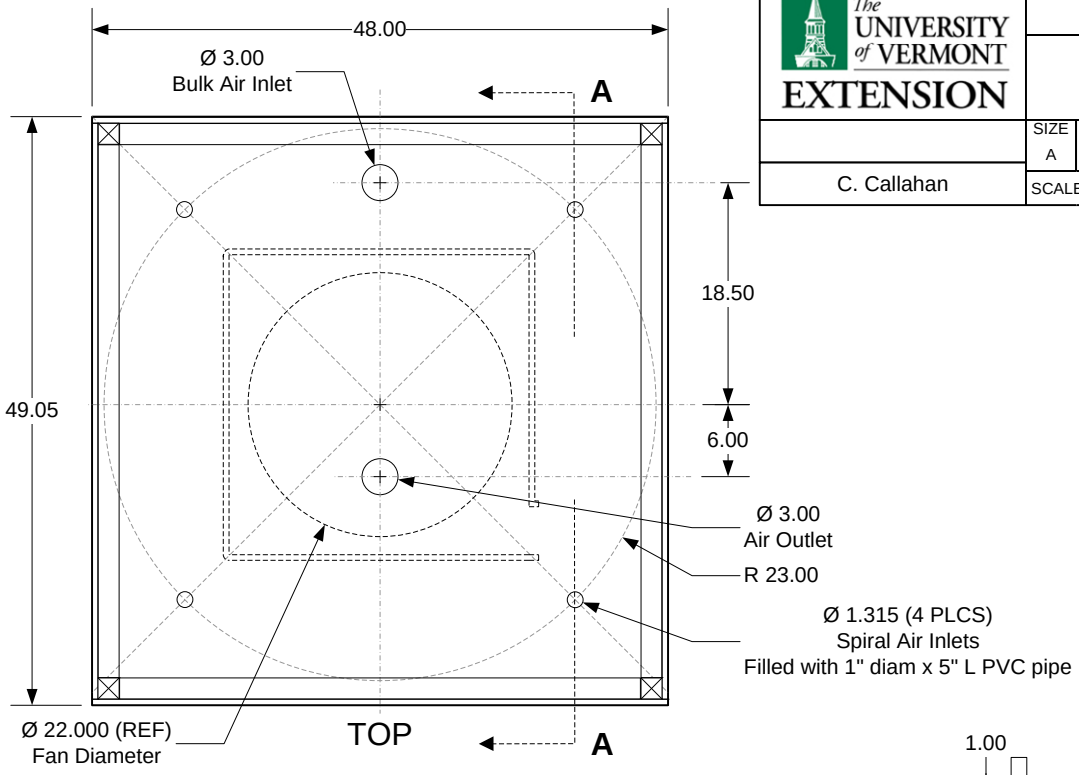

NOTE: Motor should be wired to have fan push air upward. This promotes mixing and air inlet through the 4 spiral inlets

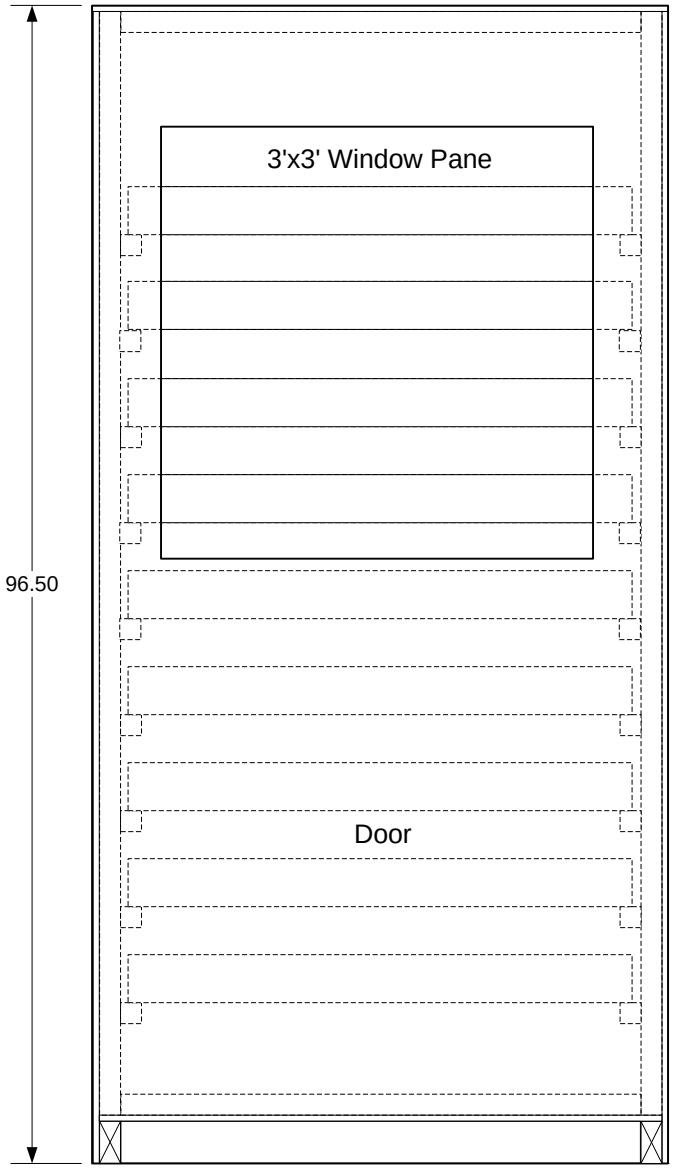

FRONT

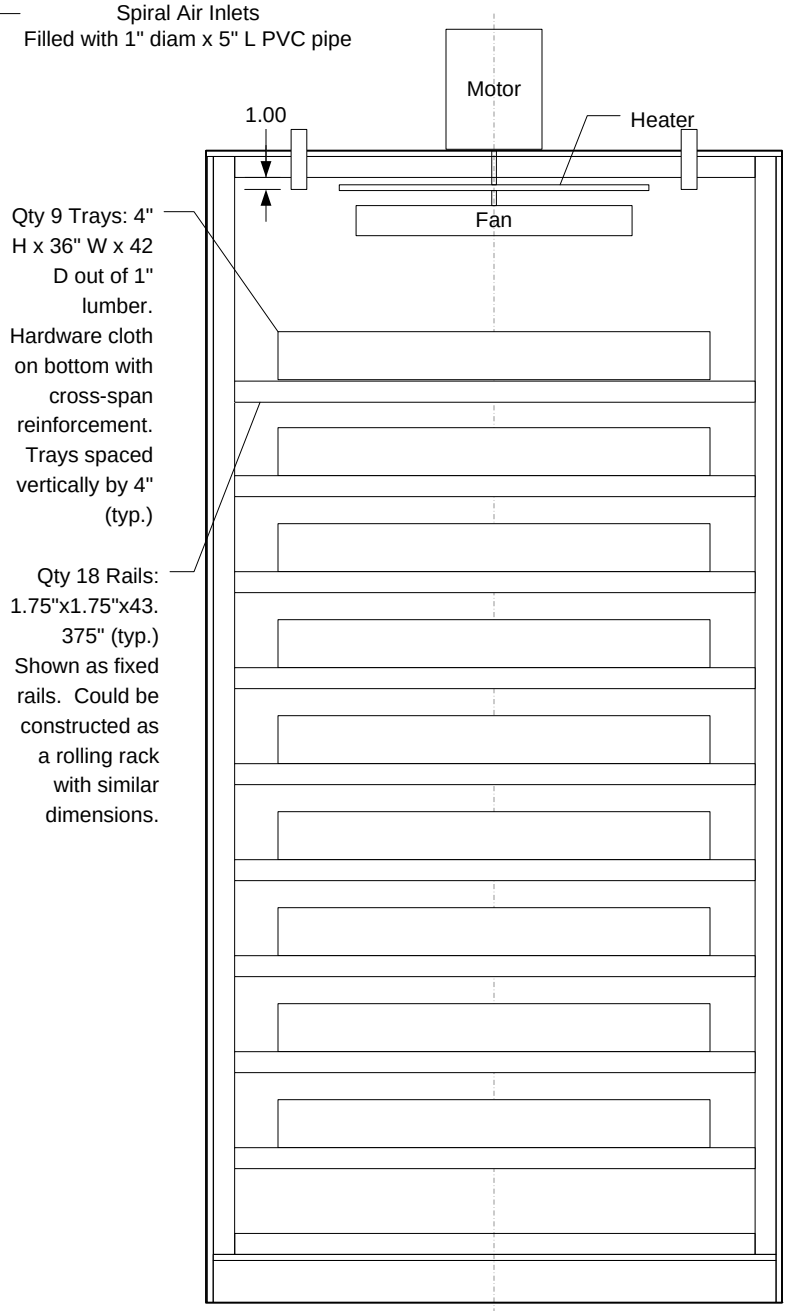

RIGHT
(Section A-A)

CUSTOMER: BORDERVIEW FARMS.

REVISIONS							
ZONE	REV	DESCRIPTION	DATE	DWN	CHKR	ENGR	APVD

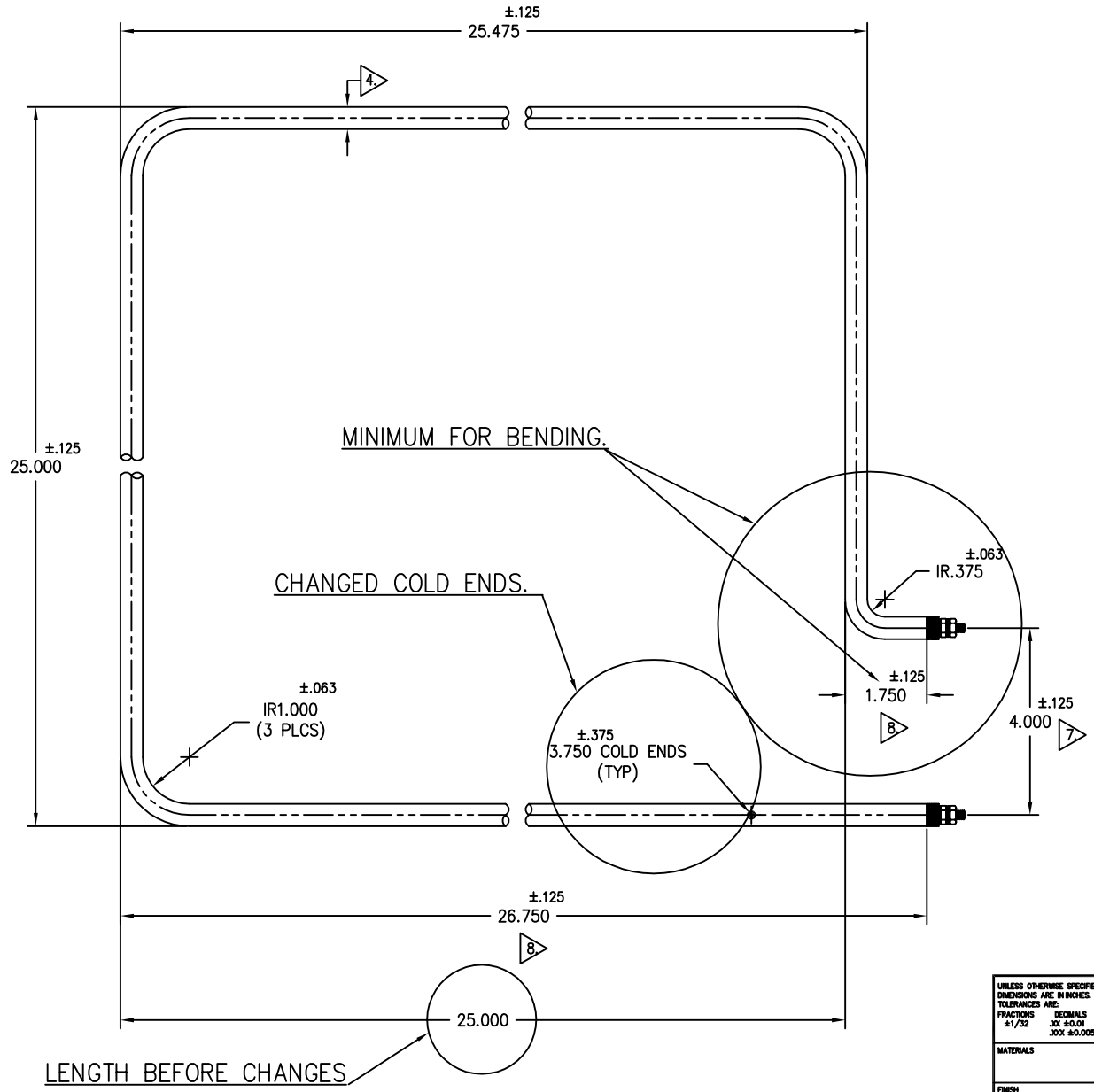

NOTES:

1. STAMP SHEATH WITH INFORMATION SHOWN IN PARENTHESES: (CHROMALOX), PART NO., (_), VOLTS (_), WATTS (_W), DATE CODE (_), MFG. LOCATION CODE (_), U.L. SYMBOL ( ) AND C.S.A. MONOGRAM ( )
2. THIS ELEMENT IS MANUFACTURED IN ACCORDANCE WITH U.L. STANDARD 1030.
3. SILICON RESIN DC-1-2577 END SEAL.
4. .475 DIA. INCOLOY 840 SHEATH.
5. MICA BUSHING INSULATORS.
6. SHIP PER ELEMENT ASSEMBLED:
   (2) #8-32 NPS HEX. NUTS.
   (6) #8 NPS FLAT WASHERS.
   (2) #8-32 NPS HEX. NUTS W/EXTERNAL TOOTH WASHER.
7. DUE TO THE FLEXIBLE NATURE OF THIS ELEMENT, THIS DIMENSION MAY VARY ±.500 BUT, CAN READILY BE RESTORED IN ASSEMBLY.
8. SHEATH ENDS TO BE IN LINE WITHIN .125".

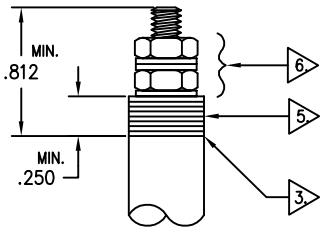

DETAIL

PART NUMBER	VOLTS	WATTS	REMARKS
393-306035-497	240	3000	

UNLESS OTHERWISE SPECIFIED, DIMENSIONS ARE IN INCHES. TOLERANCES ARE: FRACTIONS ±1/32, DECIMALS .XX ±0.01 .XXX ±0.005, ANGLES ±2°

MATERIALS

FINISH

THIS DRAWING AND THE SUBJECT MATTER SHOWN HEREON IS CONSIDERED CONFIDENTIAL AND MAY BE PROPRIETARY. UN-AUTHORIZED DISCLOSURE TO OTHER PARTIES IS EXPRESSLY FORBIDDEN.

CONTRACT NO

USED ON

APPROVALS		DATE
DWN	HP	03/07/2012
CHKR	JFL	03/07/2012
ENGR	HP	03/07/2012
APVD	EM	03/07/2012
DWO 2056759	CO#	
CAD#		

Chromalox® PRECISION HEAT AND CONTROL
Ogden, Utah 84404
www.chromalox.com

HEATER TUBULAR

SIZE	CODE IDENT	DRAWING NO	REV
C	07131	393-306035-497	0

SCALE NONE | DO NOT SCALE DRAWING | ITEM: 001 | TO: 001

DWG NO 393-306035-497 SHT 1